TekTone®
SOUND & SIGNAL

...clearly the best.

IL667
SECTION C
Rev. 7a - 02/2003

Tek-STATUS™ RS800™ Room Status System

Operation, Installation and Service Manual

Alpha Communications®
42 Central Drive
Farmingdale, NY 11735-1202
Phone: (631) 777-5500
Fax: (631) 777-5599

Website:
www.alpha-comm.com

Email:
info@alpha-comm.com

TOLL-FREE Technical #:
1-800-666-4800

APPLICATION: The Tek-STATUS™ Room Status System The Tek-STATUS™ system is designed for use in doctors' offices and other medical facilities that require visual indication of the status of patient rooms. Tek-STATUS™ is a microcontroller-based system that consists of a Master Station, Remote Dome Stations and 4-Button Peripheral Stations, Emergency Call Switches, Code Call Switches and a Power Supply. A Master Expander and an Annunciator Panel can also be added to the installation.

Operation, Installation and Service Manual

Copyright © 2002–2003 TekTone® Sound & Signal Mfg., Inc., All rights reserved.

No part of this publication may be copied without the express written permission of TekTone® Sound & Signal Mfg., Inc. The content of this manual is furnished for informational use only, is subject to change without notice, and should not be construed as a commitment by TekTone® Sound & Signal Mfg., Inc. TekTone® Sound & Signal Mfg., Inc. assumes no responsibility or liability for any errors or inaccuracies that may appear in this documentation.

TekTone, the TekTone logo, Tek-Call, Tek-Care, Tek-Check-In, Tek-Com, Tek-Digicare, Tek-Door, Tek-Entry III, Tek-Guard, Tek-Micro, Tek-Micro II, Tek-MMARS II, TekNIOS, TekNIOS II, Tek-Paging, Tek-Phone, Tek-Safe, Tek-Select II, Tek-Sentry, Tek-Sound, Tek-Status, Tek-Trio and Tek-View are either registered trademarks or trademarks of TekTone® Sound & Signal Mfg., Inc. in the United States and/or other countries. All other trademarks are the property of their respective owners.

Table of Contents

System Introduction v

A Word about ESD (Electrostatic Discharge) vi

System Installation 1
- Equipment Descriptions 1
  - RS816 Master Station 1
  - RS840 Master Expander 1
  - RS850 Remote Indication & Control Panel 1
  - LI804 Remote Dome Station 1
  - SF804 4-Button Peripheral Station 1
  - PK800A Power Supply 3
  - SF155B Emergency Station 3
  - SF156B Code Call Station 3
- Equipment Locations 3
  - RS816 Master Station 3
  - RS840 Master Expander 3
  - PK800A Power Supply 4
  - LI804 Remote Dome Station 4
  - SF804 4-Button Peripheral Station 4
  - RS850 Remote Indication & Control Panel 4
  - SF155B Emergency Station and SF156B Code Call Station 4
- Wiring Installation 4
  - Cable Specifications 5
  - General System Options 5
  - RS840 Master Expander Installation & Wiring 5
  - Multiple Master Installation & Wiring 5
  - Multiple Power Supply Installation & Wiring 6
- Wiring Checkout & System Component Installation 6
  - Main Power Distribution, Part 1 6
  - LI804 Remote Dome Station Installation & Programming 7
  - Main Power Distribution, Part 2 7
  - Peripheral Component Interface Connections 7
  - Field Data Wiring Connections 8
  - System Installation 8
- Initial System Checkouts 9

System Operation 10
- System Initialization 10
- Programming Basics 10
- Global Commands 11
- Unique Commands 11
- Global Tone Control Commands 11
- Status Advance & Lamp Reset 12
- Using the RS840 Master Expander 12
- Basic System Configuration Example 12

Enhanced System Operation 13
- General 13
  - Data Buss 13
  - DSN Buss 13
- Using Multiple Master Stations 13
- Enhanced System Configuration Example #1 14
- Enhanced System Configuration Example #2 14

Passing Visual Information 16

RS850 Remote Indication & Control Panel Installation 17
General 17
RS850 Addressing 17
LI804 Remote Dome Station Indication 17

Illustrations & Wiring Diagrams

Figure 1—RS816 Master Station 2
Figure 2—RS840 Master Expander 2
Figure 3—RS850 Remote Indication & Control Panel 2
Figure 4— LI804 Remote Dome Station 2
Figure 5—SF804 4-Button Peripheral Station 2
Figure 6—PK800A Power Supply 2
Figure 7—SF155B Emergency Station 2
Figure 8—SF156B Code Call Station 2
Figure 11—Tek-STATUS™ System Block Wiring Diagram 19
Figure 12—Tek-STATUS™ Multiple Master Block Wiring Diagram 20
Figure 13—PL467 Wall Plate Wiring Diagram 21
Figure 14—Tek-STATUS™ Group Configuration 22
Figure 15—LI804 Remote Dome Station Programming 23

System Introduction

The Tek-STATUS™ Room Status System is a flexible microcontroller-based system that provides visual indication of the status of examination rooms within a doctor's office or other medical facility. Status indications are provided by addressable LI804 Remote Dome Lamps and are also displayed on the Master Station. Provisions for Emergency and Code annunciations are also available.

The RS816 Master Station and RS840 Master Expander (if required) make up the console that displays room status. The Master Station console provides facilities for:

- Changing the status of a room
- Displaying the status of assigned rooms
- Selecting the default status indications
- Custom assignment of status indications
- Audible and visual indication of emergency calls, code calls and service requests.

The features of all Tek-STATUS™ components are discussed in greater detail in the *System Installation: Equipment Descriptions* section.

Detailed wiring and a plug-in design provides ease of installation in new and existing facilities. Because the system's flexibility allows it to be installed in many configurations, it is necessary to distinguish the components that make up a "Basic" versus an "Enhanced" Tek-STATUS™ Room Status System.

A Basic Tek-STATUS™ Room Status System is limited to:

- RS816 Master Station—one
- RS840 Master Expander—one
- LI804 Remote Dome Stations—up to 40
- SF804 4-Button Peripheral Stations—one per LI804
- SF155B Emergency Call Stations—one per LI804
- SF156B Code Call Stations—one per LI804
- PK800A Power Supply requirements are described in the *Wiring Installation: General System Options* section.

An Enhanced Tek-STATUS™ Room Status System employs a DSN buss to enable master to master communication and RS850 Remote Indication & Control Panels. An Enhanced system is limited to:

- RS816 Master Stations—up to 10. (Note: If 10 RS816 Master Stations are used, one must be configured as a lobby station and will have no associated LI804 Remote Dome Stations. See *Enhanced System Operation: Using Multiple Master Stations*.)
- RS840 Master Expanders—one per RS816
- RS850 Remote Indication & Control Panels—up to 6
- LI804 Remote Dome Stations— up to 40 per RS816
- SF804 4-Button Peripheral Stations—one per LI804
- SF155B Emergency Call Stations—one per LI804
- SF156B Code Call Stations—one per LI804
- PK800A Power Supply requirements are described in the *Wiring Installation: General System Options* section.7

A Word about ESD (Electrostatic Discharge)

What Is It? Static electricity is a result of triboelectric charging of two dissimilar non-conductive materials rubbed together, like rubbing your feet on a carpet on a cold winter day, or in a dry climate. The resulting charge is detected when you reach out to touch a doorknob, or some other metallic object. The resulting discharge may be only startling, or in severe cases it may even be painful. The actual electrical charge is dependent on the materials rubbed together, humidity, rate of separation and other factors.

What Can It Do? While this effect may be disturbing to humans, the effect on electronic equipment is often more serious, ranging from disrupting the operation to actual damage of the components. These effects result from the high voltages that may be developed. The simple act of walking across a carpet may develop as much as 30,000 volts; changing a bed sheet may create a charge of 100,000 volts or more. Such voltages readily cause arcing (the spark you see in the dark when you grab the doorknob, after walking across the carpet, etc.) The arcing is evidence of a discharge path. Due to the high voltage involved, the discharge current can jump to any nearby metallic object. If the discharge is to or through an electronic device, such as the Tek-STATUS™ Room Status System, the operation of the equipment may be affected. If the discharge current passes through internal components, these components may be damaged or their operation degraded.

What Can We Do About It? The manufacturer of the Tek-STATUS™ Room Status System has already taken steps to protect the equipment from electrostatic discharge (ESD) effects. However, since the cause of the problem is not in the equipment, but in the environment, further measures are required of the installer and the user to achieve complete protection.

What Can The Installer Do? In humid climates or in places where the relative humidity is kept at 65% or greater, there will likely be few problems with ESD. Where problems may occur, the following measures can be taken.

1. Ground all exposed metal surfaces, such as the PK800A Power Supply enclosure.
2. Install Tek-STATUS™ Room Status System wiring in metal conduit. The conduit must be electrically continuous and be grounded.
3. Use the specified cable type for the installation of the Tek-STATUS™ Room Status System. Any deviation from the specified cable type, such as the use of open conductors, invites inductive coupling of discharge currents that can cause the same problems as direct discharge currents.
4. Ground your body before handling system components. This can be done using a wrist strap, or simply by contacting a grounded surface. Use caution to avoid hazardous voltages while grounded.

What Can The User Do? The most common cause of system failure due to ESD that can be attributed to the user is usually improper movement and installation of equipment. It is recommended that if it is necessary to move a component of the Tek-STATUS™ that has already been installed, a qualified installation person should be contacted.

This information is provided to make you aware of ESD problems so that precautions may be taken to avoid damage and disruption of system operation.

System Installation

Equipment Descriptions

Read the following instructions concerning system equipment, as well as the installation and power-up guidelines, to determine installation methods before proceeding.

RS816 Master Station

The RS816 Master Station (see *Figure 1*) provides all the necessary controls for the Tek-STATUS™ Room Status System. The front panel of the RS816 displays the status of up to 16 rooms using 64 LED indicators arranged in two 4x8 matrices—4 indicators per room. These matrices provide the nurse station or other designated area with a visual indication of the status of all rooms attached to the system. Programming the system is accomplished using the keypad, which is above the matrices. In the event of a loss of power, all programming will return when system power is restored. All inputs to the master station are accomplished by means of a modular connector cable between the master station and a wall-mounted modular jack.

RS840 Master Expander

The RS840 Master Expander (see *Figure 2*) expands the capacity of the RS816 Master Station to 40 rooms, by adding 24 rooms in three additional 4x8 matrices. All programming for the RS840 is accomplished at the RS816. System interface is accomplished be means of a modular connector cable between the RS816 and the RS840.

RS850 Remote Indication & Control Panel

The RS850 Remote Indication & Control Panel (see *Figure 3*) is designed to be installed in areas that provide services and support to the doctor or nursing staff, such as X-ray or laboratories. The RS850 supports only one lamp from each associated LI804 Remote Dome Station, which is used to indicate that a service is required in a particular room. The RS850 provides an audible and visual indication of a requirement, as well as a means of acknowledging the call by pressing the associated switch on the membrane keypad. The RS850 is connected to the system by means of a modular connector cable and a PL467 Wall Plate.

LI804 Remote Dome Station

The LI804 Remote Dome Station (see *Figure 4*) provides visual indication of a room's status. The LI804 consists of four colored dome lamps and the necessary operational electronics, and it is mounted near the room for which it indicates status information. The LI804 is addressable, and each unit must have a unique address. Primary input to the LI804 originates from the SF804 4-Button Peripheral Station. In turn, the LI804 communicates bi-directionally with the RS816 Master Station.

The LI804 may also be used as a zone lamp—prioritizing and annunciating call activity in any one zone or in all zones. Connecting pin #1 to pin #9 changes its function to a zone light. The dome will annunciate calls by priority. An LI804 configured in this fashion does not occupy an address, but counts towards the limit established for maximum devices per run and per power supply. Zone selection is accomplished by setting the corresponding dipswitch to the "on" position (see *Figure 15*). Stations addresses 0–15 belong to Zone 1, addresses 16–31 belong to Zone 2, and addresses 32–40 belong to Zone 3.

SF804 4-Button Peripheral Station

The SF804 4-Button Peripheral Station (see *Figure 5*) consists of a wall-mounted switch assembly that is wired to an LI804 Remote Dome Station. The SF804 must be used in conjunction with a LI804, and cannot operate as a stand-alone device. Mount the SF804 4-Button Station within an examination room. When one of the buttons on the SF804 is pressed, the corresponding LI804 dome lamp will change state, and a light within the button switch is turned on. This verifies that the switch closure has been made and that the corresponding dome lamp has been turned on. The buttons' colors (yellow, green, red and white) correspond with the LI804 dome lamp colors.

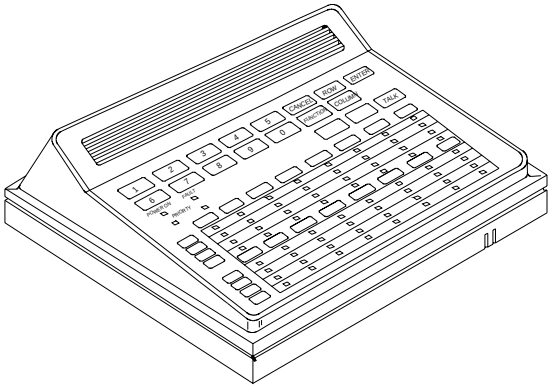

Figure 1—RS816 Master Station

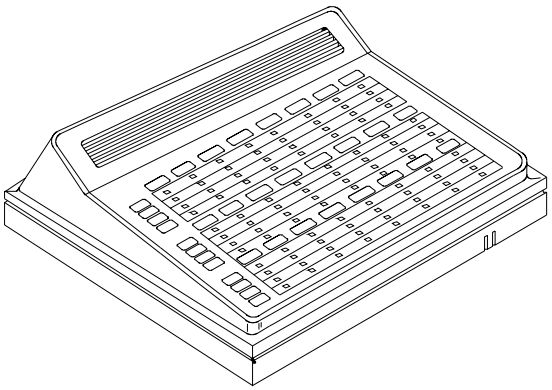

Figure 2—RS840 Master Expander

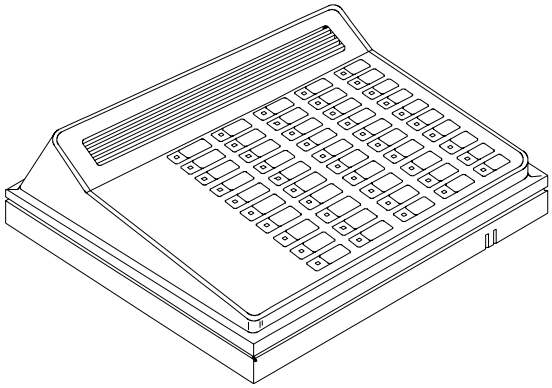

Figure 3—RS850 Remote Indication & Control Panel

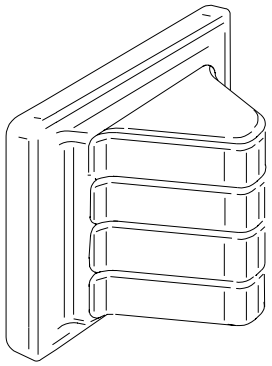

Figure 4—LI804 Remote Dome Station

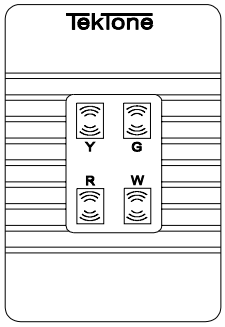

SF804 Product Drawing R0 102502 1

Figure 5—SF804 4-Button Peripheral Station

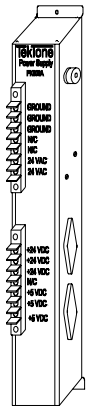

PK800A Product Drawing R0 102502 1

Figure 6—PK800A Power Supply

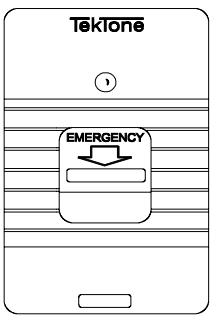

SF155B Product Drawing R0 102502 1

Figure 7—SF155B Emergency Station

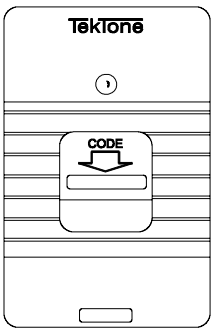

SF156B Product Drawing R0 102502 1

Figure 8—SF156B Code Call Station

PK800A Power Supply

The PK800A Power Supply (see *Figure 6*) is designed to power the Tek-STATUS™ Room Status System, It has +24VDC outputs for the remote dome stations and +5VDC outputs for the master station, master expander and remote indication & control panel. The PK800A power supply is short-circuit protected so that momentary shorts will not cause a power supply failure. If a short on either of the power supply's outputs remains for more than a few seconds, the 4 amp fuse will blow. After the short has been cleared and the fuse replaced, the power supply will return to normal operation.

SF155B Emergency Station

The SF155B Emergency Station (see *Figure 7*) is for use in any location where activation of an emergency signal is required. The SF155B employs a slide switch activator and can be used with or without the supplied pull cord. When this switch is activated, the green and amber lamps on the associated LI804 Remote Dome Station will flash alternately, as will the corresponding indicators on the master station or master expander. The master station will also emit a slow repeating tone. The SF155B panel includes a red call-assurance LED that lights when a call has been placed. The SF155B is not supervised.

An emergency call overrides any normal annunciation that may be present on the LI804 Remote Dome Station. The system's previous status will return after the emergency call has been cleared.

SF156B Code Call Station

The SF156B Code Call Station (see *Figure 8*) is for use in any location where activation of a code signal is required. The SF156B employs a slide switch activator. When this switch is activated, the red and white lamps on the associated LI804 Remote Dome Station will flash alternately, as will the corresponding indicators on the master station or master expander. The master station will also emit a slow repeating tone. The SF156B panel includes a red call-assurance LED that lights when a call has been placed. The SF156B is not supervised.

A code call overrides any annunciation that may be present on the LI804. The system's previous status will return after the code call has been cleared.

Equipment Locations

Locate the Tek-STATUS™ equipment in accordance with the following information. The installation of all system equipment must meet the requirements of the current National Electrical Code, ANSI/NFPA #70. Do not locate or install Tek-STATUS™ components in or near areas of high humidity, static electricity, radiation or heat.

RS816 Master Station

Locate the RS816 Master Station in an accessible area at the nurses station and/or reception area. For optimum operation, locate the RS816 in an area with an average temperature of approximately 24°C (75°F) with 70–80% relative humidity.

The interface to the system is accomplished via a PL467 wall plate. The maximum cable length between the wall plate and the RS816 is 7'. The modular interface cable is supplied with the master station. Place the PL467 wall plate so that it is convenient for cable runs to the LI804 Remote Dome Stations. Wire length of the data buss to the last LI804 must not exceed 1000'. Also see the section *Equipment Locations: PK800A Power Supply* for the maximum wire lengths of the power lines.

RS840 Master Expander

Locate the RS840 Master Expander (if used) adjacent to the RS816 Master Station. The supplied modular interface cable is approximately 16".

PK800A Power Supply

Mount the PK800A Power Supply in an area with good ventilation. The total wire length between the PK800A and any PL467 wall plate must not exceed 18'. The total wire length between the power supply and any LI804 Remote Dome Station must not exceed 250'. Additional PK800A power supplies must be used if any LI804 Remote Dome Stations are located more than 250' from the power supply.

The 24VAC / 60 Hz. input to the power supply is provided by a transformer supplied by the installer. The wire length between output from the transformer and the input to the power supply must not exceed 3'. The transformer must meet these parameters:

Input Voltage:	120VAC / 60 Hz. Single Phase
Output Voltage:	24VAC / 60 Hz. Single Phase
Output Power:	100VA / (Continuous Service)

LI804 Remote Dome Station

Mount the LI804 Remote Dome Station in the corridor above or beside the door of its associated room, in a location that provides unobstructed visibility of the dome lights. (See the sections *Equipment Locations: RS816 Master Station* and *Equipment Locations: PK800A Power Supply* for maximum wire lengths.) No more than sixteen LI804s may be on a data buss run, regardless of run length.

SF804 4-Button Peripheral Station

One SF804 4-Button Peripheral Station is required for each LI804 Remote Dome Station (except an LI804 used as a zone lamp). Mount the SF804 within the room of the associated LI804. Wire length from the SF804 to its associated LI804 must not exceed 25'. An SF804 is not needed if a room requires only code or emergency calls to be annunciated.

RS850 Remote Indication & Control Panel

Locate the RS850 Remote Indication & Control Panel in an accessible area of the designated laboratory or doctor's office. For optimum operation, locate the panel in an area with an average temperature of approximately 24°C (75°F), with 70–80% relative humidity.

The interface to the system is accomplished via a PL467 wall plate. The maximum cable length between the wall plate and the RS850 is 7'. The modular interface cable is supplied with the RS850. Wire length from the RS850's wall plate to the RS816's wall plate must not exceed 250'.

SF155B Emergency Station and SF156B Code Call Station

Mount SF155B Emergency Stations and the SF156B Code Call Stations (if used) on a wall, with convenient access for operation. (Also consider whether the emergency station will be operated with the pull cord when determining location of the SF155B.) Wire length from the SF155B or SF156B to the LI804 must not exceed 50'.

Wiring Installation

This section of the manual describes how to wire a basic Tek-STATUS™ Room Status System, and includes a list of the cable types required to accomplish the installation. This section of the manual and the wiring diagrams (*Figures 11–15*) must be fully read and understood before attempting to install the system. Give special attention to the specified cable lengths for each component of the Tek-STATUS™ system. Do not substitute cable types, particularly data cables, for those listed in this manual. Tek-STATUS™ uses current state-of-the-art digital processing between the master station, master expander, remote indication & control panel, and remote dome stations. If the electrical characteristics of the data cable are different than that specified, distortion of the digital data and unreliable system operation can result.

Caution: If this equipment is installed near strong magnetic fields (such as transmitting antennas, microwave energy or radiology-type operations), all cable runs must be installed in metal conduit and an earth ground shorter than 10 feet must be attached to a single point on the conduit. The conduit-to-ground system must have an overall impedance of less than 0.1 ohms as indicated on a 500 volt insulation tester.

Cable Specifications

Use these cable types to install the Tek-STATUS™ system:

- Power Supply Interconnect—two conductor, #14 AWG, stranded
- Field Communications Buss—one twisted (8 twists/ft min.), shielded pair, #24 AWG, stranded, low capacitance (<24pf/ft)
- SF804 4-Button Peripheral Stations—six conductor, #22 AWG, stranded—plus one conductor, #18 AWG, stranded
- Master Communications Buss—one twisted (8 twists/ft min.), shielded pair, #24 AWG, stranded, low capacitance (<24pf/ft)
- SF155B Emergency and SF156B Code Stations—four conductor, #22 AWG, stranded
- DSN Buss—one twisted, shielded pair, #24 AWG, stranded, low capacitance (<24pf/ft)

General System Options

In a standalone configuration, the RS816 Master Station provides annunciation for up to 16 rooms. Adding an RS840 Master Expander provides annunciation for up to 40 rooms. The complete system also includes PK800A Power Supplies, LI804 Remote Dome Stations and SF804 4-Button Peripheral Stations.

Tek-STATUS™ is capable of supporting up to ten RS816 Master Stations.

Multiple PK800A Power Supplies are required for extended system applications (such as a system with multiple master stations, and installations that use more than eight LI804 Remote Dome Stations). This is due to both the signal loss associated with long cable runs, and the current required by the many components attached to the power supply. Determine the number of power supplies required, as follows:

One PK800A Power Supply can support:

- One RS816 Master Station and up to eight LI804 Remote Dome Stations, or
- One RS816 Master Station, one RS840 Master Expander and up to eight LI804 Remote Dome Stations, or
- One RS850 Remote Indication & Control Panel and up to eight LI804 Remote Dome Stations, or
- Up to eight LI804 Remote Dome Stations

(**Note:** One PK800A **can** support one RS816 and one RS840 and one RS850 with up to eight LI804s if the wire lengths are strictly adhered to. This means that the PL467 wall plate for the RS816 Master Station must be less than 30' from the PL467 wall plate for the RS850 Remote Indication & Control Panel. This is not practical in most applications.)

RS840 Master Expander Installation & Wiring

To install an RS840 Master Expander, connect the supplied short modular cable between the AUX modular jack at the back of the RS816 Master Station and the LINE modular jack at the back of the RS840 Master Expander. This cable provides the required power and the data interface connections. No other connections are required (see *Figure 11*).

Multiple Master Installation & Wiring

Tek-STATUS™ can support up to ten RS816 Master Stations. The master stations are connected from wall plate to wall plate using two pair of #24 AWG shielded stranded/ low capacitance cable (see the section *Wiring Installation: Cable Specifications*). Two of the shielded wires in this cable are used for data transmission between the master stations, while the remaining two wires are used as a common power supply return (see *Figure 12*).

Multiple Power Supply Installation & Wiring

Multiple PK800A Power Supplies are required to support large system configurations. Refer to the section *Wiring Installation: General System Options* to determine the number of power supplies required for this specific Tek-STATUS™ installation.

NOTE: When using multiple power supplies, the positive (+) outputs of the power supplies are never connected together. Connecting the positive outputs of power supplies together can damage the devices. All the power supplies used in a single Tek-STATUS™ installation must have a common GROUND connection.

Wiring Checkout & System Component Installation

Before installing any Tek-STATUS™ components, a complete checkout of the system wiring must be performed to verify that there are no shorted wires and that continuity exists between specific points.

There are numerous methods to accomplish this task. This procedure will guide you through verification of a typical Tek-STATUS™ wiring installation, consisting of these components:

2–PK800A Power Supplies
1–RS816 Master Station
1–RS840 Master Expander
1–SF155B Emergency Station
1–SF156B Code Call Station
12–LI804 Remote Dome Stations
12–SF804 4-Button Peripheral Stations

Main Power Distribution, Part 1 (See *Figure 11*)

1. Without power to the system, check these points for continuity on every PK800A:

   a. Any GROUND pin to any +5 VDC pin.

   b. Any GROUND pin to any +24 VDC pin.

      Desired Result: No continuity.

      Expected Failure: If there is continuity present, the fuse in the power supply will blow. This indicates that the main power is shorted and the wiring must be corrected before proceeding.

   c. Any +24 VDC pin on one PK800A to any +24 VDC pin on another PK800A.

      Desired Result: No continuity.

      Expected Failure: If there is continuity present, the two power supply outputs are shorted. This can cause overheating and possible failure of the power supply.

   d. Any GROUND pin on one PK800A to any GROUND pin on another PK800A.

      Desired Result: Continuity present

      Expected Failure: If continuity does not exist, the Tek-STATUS™ components that are attached to one of the power supplies will not receive operational power or may function erratically.

2. With power connected to the system, check the DC voltage at the following points on every PK800A:

   a. Positive (+) test lead to any +5 VDC screw terminal; Negative (–) test lead to any GROUND screw terminal.

      Desired Result: +5 VDC (± .5 VDC)

b. Positive (+) test lead to any +24 VDC screw terminal; Negative (–) test lead to any GROUND screw terminal.

Desired Result: between +24 VDC and +27 VDC.

If desired results are not obtained during this testing, one of two problems exist: either the field power wiring is incorrect, or the PK800A is not functioning. Disconnect all wiring from the PK800A in question and repeat the test. If desired results are obtained, there is a short or a wiring error in the field wiring. If desired results are not obtained, the power supply is not functioning. **Make all necessary corrections before proceeding.**

LI804 Remote Dome Station Installation & Programming

Remove power from the system, and then install all LI804 Remote Dome Stations. As each LI804 is installed, its unique address must be set. This is accomplished by positioning the J3 jumper and the switches on the 4-switch dipswitch, as shown in *Figure 15*. Failing to perform this programming step will result in improper operation of the remote dome stations.

Main Power Distribution, Part 2 (See *Figure 11*)

1. With power connected to the system, check the DC voltage at the following points on every LI804 Remote Dome Station:

a. Positive (+) test lead to Pin 15 (Green/White) of the 15-pin connector; Negative (–) test lead to Pin 13 (Orange/White) of the 15-pin connector.

Desired Result: Voltmeter indicates between +24 VDC and +27 VDC.

b. Positive (+) test lead to Pin 1 (Brown) of the 15-pin connector; Negative (–) test lead to Pin 13 (Orange/White) of the 15-pin connector.

Desired Result: Voltmeter indicates +5 VDC ± .5 VDC.

If the desired results are not obtained during this testing, the field wiring is incorrect. **Make all necessary corrections before proceeding.**

c. At the SF804 4-Button Peripheral Station: Positive (+) test lead to Pin 1 (Brown) of the 6-pin connector; Negative (–) test lead to Pin 6 (Blue) of the 6-pin connector.

Desired Result: Voltmeter indicates +5 VDC ± .5 VDC.

d. At the SF155B (Emergency Station) and/or SF156B (Code Station): Positive (+) test lead to Pin 1 (Brown) of the 6-pin connector; Negative (–) test lead to Pin 2 (Red) of the 6-pin connector.

Desired Result: Voltmeter indicates between +24 VDC and +27 VDC.

If the desired results are not obtained during this testing, the field wiring is incorrect. **Make all necessary corrections before proceeding.**

Peripheral Component Interface Connections (See *Figure 14*)

1. Without power to the system, check the following points for continuity on every LI804 Remote Dome Station (15-pin connector):

Pin 5 (Green) of the SF155B to Pin 6 (Blue) of the LI804.
Pin 5 (Green) of the SF156B to Pin 7 (Violet) of the LI804.
Pin 2 (Red) of the LI804 to Pin 2 (Red) of the SF804.
Pin 3 (Orange) of the LI804 to Pin 3 (Orange) of the SF804.
Pin 4 (Yellow) of the LI804 to Pin 4 (Yellow) of the SF804.
Pin 5 (Green) of the LI804 to Pin 5 (Green) of the SF804.

Desired Result: Continuity exists. The voltmeter should indicate less than .2 ohms of resistance.

2. Verify that Pin 3 (Orange), Pin 4 (Yellow) and Pin 6 (Blue) of the SF155B and SF156B are not connected to anything.

If any of the associated wiring is shorted, or is not connected to the correct input pin on the LI804, incorrect data will be sent to the microprocessor. These wiring errors will result in incorrect or no annunciations at the required locations. **Make all necessary corrections before proceeding.**

Field Data Wiring Connections (See *Figure 14*)

To properly verify the field data wiring connections, insert a tone generator or buzzer at the PL467 wall plate that the RS816 Master Station will be connected to. The field data wiring consists of a single twisted-shielded pair. The positive (+) and negative (–) connections are the only connections that are physically made to the LI804 Remote Dome Station circuit board. The associated cable shield must be carried through from one LI804 to the next, but the shields are not electrically connected to the LI804.

Before executing this test, remove power input from all PK800A Power Supplies.

1. Temporarily connect an audio tone generator or buzzer to Pin 3 (+) and Pin 8 (–) of the modular wall jack.
2. At the first LI804 Remote Dome Station, momentarily attach an 8-ohm speaker between Pin 2 (+) (Red) and Pin 4 (–) (Yellow) of the 4-pin connector.

   Desired Result: A tone or buzz should be heard from the speaker. If the desired results are not obtained during this testing, the field wiring is incorrect. **Make all necessary corrections before proceeding.**
3. Repeat Step 2 at every installed LI804 Remote Dome Station.
4. Disconnect the audio tone generator or buzzer from Pin 3 (+) of the modular wall jack and attach it to Pin 4 (+) of the modular wall jack. Do not remove the wire that is attached to Pin 8 (–) of the modular wall jack.
5. At the first LI804 Remote Dome Station, momentarily attach an 8-ohm speaker between Pin 3 (Orange) and Pin 4 (Yellow) of the 4-pin connector.

   Desired Result: A tone or buzz should be heard from the speaker. If the desired results are not obtained during this testing, the field wiring is incorrect. **Make all necessary corrections before proceeding.**
6. Repeat Step 5 at every installed LI804 Remote Dome Station.
7. Disconnect the tone generator or buzzer from the modular wall jack.

System Installation

After successfully completing the steps outlined previously in this section, it is safe to attach the remaining Tek-STATUS™ components to their respective connectors. Install the Tek-STATUS™ components using the supplied cables.

Initial System Checkouts

After all Tek-STATUS™ components have been installed and the address switches for each LI804 Remote Dome Station have been set, apply power to the PK800A Power Supplies.

Next, assign a unique address to each RS816 Master Station. Use address #0 for a lobby master that has no LI804 Remote Dome Stations associated with it. Use addresses #1 through #9 for all other master stations. To assign an address, perform the appropriate keypad entry at each RS816 Master Station:

- at the Lobby Master: **FUNCTION, 80, ENTER**
- at Master #1: **FUNCTION, 81, ENTER**
- at Master #2: **FUNCTION, 82, ENTER**
- at Master #3: **FUNCTION, 83, ENTER**
- at Master #4: **FUNCTION, 84, ENTER**
- at Master #5: **FUNCTION, 85, ENTER**
- at Master #6: **FUNCTION, 86, ENTER**
- at Master #7: **FUNCTION, 87, ENTER**
- at Master #8: **FUNCTION, 88, ENTER**
- at Master #9: **FUNCTION, 89, ENTER**

Then at each RS816 Master Station, perform this keypad entry to initialize the system:

FUNCTION, 99, ENTER

After a few moments, the RS816 will emit two short beeps to indicate that the system is ready to begin normal operation. At this point, the Tek-STATUS™ system should be fully operational using system default settings.

To verify system operation, press each of the four buttons, one at a time, on every SF804 4-Button Peripheral Station while verifying that both the same-colored lamp on the corresponding LI804 Remote Dome Station and the button being pressed are lit.

Activate each SF155B Emergency Station and verify that:

- The red LED on the SF155B is lit.
- All associated RS816 Master Station are flashing the green and amber indicators and emitting an audible tone at a slow on and off rate.
- The green and amber lamps of the associated LI804 Remote Dome Station are flashing.

Activate each SF156B Code Station and verify that:

- The red LED on the SF156B is lit.
- All associated RS816 Master Stations are flashing the red and white indicators and emitting an audible tone at a fast on and off rate.
- The red and white lamps of the associated LI804 Remote Dome Station are flashing.

This completes the initial system checkout.

System Operation

Tek-STATUS™ has been designed to provide many selectable annunciation types, so that the system may be customized to accommodate the specific need of an installation. Selecting the desired annunciation type is accomplished at the master station keypad. When the system is first initialized, Tek-STATUS™ defaults to a Light On/Light Off annunciation. If this type of annunciation is satisfactory, no programming changes are necessary.

System Initialization

System initialization is required whenever the number of installed LI804 Remote Dome Stations changes, or to restore the system to the original factory default settings. **When a system initialization is performed, all previous programming, whether global or unique, will be lost.** To accomplish a system initialization, perform the following sequence of keystrokes at the master station:

FUNCTION, **99**, ENTER

After the initialization has completed, the master station will emit two short beeps to indicate that the system is ready to resume normal operation.

Programming Basics

All changes to the system programming are accomplished at the associated RS816 Master Station. All active indications must be cleared or reset before attempting any programming changes. System programming is divided into two sections:

- Global Commands
- Unique Commands

For a complete list of global and unique commands see the section *System Operations: Global and Unique System Programming Codes*.

Global commands change the type of annunciation for any given RS816 Master Station, and the type chosen applies to all LI804 Remote Dome Stations associated with that master. Unique commands are used to change the annunciation type of one specific LI804 Remote Dome Station.

This is a typical example of using global and unique commands:

- At the master station, enter this global command:

  FUNCTION, **91**, ENTER

  This command makes all amber and green dome lamps operate in an On/Off configuration, while the red and white dome lamps operate in a Flash/On/Off configuration.

- If this configuration is correct, except that the white lamp for room #1 (i.e., the room that displays in column 1 of the master station) must operate in the On/Off configuration, then at the master station, enter this unique command:

  COLUMN, **1**, ROW, **4**, FUNCTION, **11**, ENTER

  This changes only the white lamp for room #1 (i.e., column 1) to operate in the On/Off configuration.

Global Commands

Function	Description
90	All dome lamps (amber, green, red and white) set to On/Off mode.
91	All amber and green set to On/Off. All red and white set to Flash/On/Off.
92	All amber set to On/Off. All green, red and white set to Flash/On/Off.
93	All amber set to On/Flash/Off. All green, red and white to Flash/On/Off.
94	All dome lamps (amber, green, red and white) set to Flash/On/Off.
95	All dome lamps (amber, green, red and white) set to Flash/Off.
96	All amber set to On/Off. All green set to Flash/Fast Flash/Off. All red and white to Flash/On/Off.

Function 90 is the default setting. Any global command function code can be programmed from the master station using the following keystrokes:

FUNCTION, **90** (or other global command number), ENTER

This entry causes all of the attached remote dome stations to operate in On/Off mode.

Unique Commands

Function	Description
11	Sets selected lamp to On/Off.
12	Sets selected lamp to Flash/Off.
15	Sets selected lamp to On/Flash/Off.
16	Sets selected lamp to Flash/On/Off.
18	Sets selected lamp to Flash/Fast Flash/Off
19	Sets selected lamp to On/Flash/Fast Flash/Off

Any unique command function code can be programmed from the master station using the following keystrokes: (Note: COLUMN, X, ROW, X, designates the lamp's position on the master station keypad.)

COLUMN, **1**, ROW, **1**, FUNCTION, **12** (or other unique command number), ENTER

This entry causes the first remote dome station's amber light to operate in Flash/Off mode. All remaining remote dome stations attached to the system will continue to operate in the globally programmed mode previously selected.

Global Tone Control Commands

Code	Description	Code	Description
40	Tone off (default)	45	15 second tone
41	3 second tone	46	18 second tone
42	6 second tone	47	21 second tone
43	9 second tone	48	24 second tone
44	12 second tone	49	constant tone

Global tone control command settings cause the master station to emit a repeating tone for the specified duration when there is a flashing lamp/LED on the system. Program any code from the master station using the following keystrokes:

FUNCTION, **44** (or other global tone control command number), ENTER

This entry causes the master station to emit a repetitive tone for 12 seconds whenever there is a flashing lamp/LED on the system. Any tone except code or emergency can be silenced by pressing the CANCEL key.

Status Advance & Lamp Reset

Advance the status of a dome lamp through its normal sequence using the following keystrokes:

COLUMN, column#, **ROW,** row#, **ADVANCE**

This keypad entry will turn off a flashing lamp whose mode has been programmed as On/Flash/Off, or will make the same lamp that is on begin flashing. (This function creates the same effect as if the associated SF804 button had been pressed.)

To reset a dome lamp without stepping through the status levels, enter these keystrokes:

COLUMN, column#, **ROW,** row#, **RESET**

Using the RS840 Master Expander

The RS840 Master Expander is designed to increase the capacity of the RS816 Master Station from 16 remote dome stations to 40 stations. As each additional LI804 Remote Dome Station is installed, set its address using its programming jumper at J3 (see *Figure 15*). Remote dome stations for rooms 1–16 do not require a jumper at J3, so the jumper is stored attached to only one pin. Install the J3 jumper between pins 1 and 2 for rooms 17–32, and between pins 2 and 3 for rooms 33–40.

The remote dome stations associated with the master expander are programmed using the RS816 Master Station keypad. Whenever the quantity of dome lamp stations attached to the master station is changed, the system must be initialized using this command:

FUNCTION, 99, ENTER

The system's programming may then be customized using the global and unique commands previously described.

Basic System Configuration Example:

System components:

- One (1) RS816 Master Station
- One (1) RS840 Master Expander
- Forty (40) LI804 Remote Dome Stations
- Forty (40) SF804 4-Button Peripheral Stations

Preliminary system checks:

- Refer to sections *Wiring Checkout & System Component Installation: LI804 Remote Dome Station Programming* and *System Operation: Using the RS840 Master Expander.*
- Verify that the correct address programming has been performed on the LI804.

Programming:

- Enter these keystrokes at the RS816: **FUNCTION, 81, ENTER, FUNCTION, 99, ENTER.** After approximately 20 seconds, the RS816 will emit two beeps, indicating that it has searched the data buss for all attached LI804 Remote Dome Stations. Do not make any key entries to the system until the two beeps are heard.
- The system should now be fully operational.

Enhanced System Operation

The enhanced operational capabilities of the Tek-STATUS™ Room Status System allow the connection of up to ten RS816 Master Stations and their RS840 Master Expanders (if required) together to form a versatile interactive system. The RS816 Master Station is also used to:

- Display the status of assigned rooms
- Program the types of status indications
- Assign specific custom status indications both audibly and visually
- Indicate emergency and code conditions

Tek-STATUS™ is capable of supporting many system configurations. This section provides examples of various installed system configurations and the proper sequence of programming keystrokes to enable all the functions of the Tek-STATUS™ system. (Note: These are only examples—the system can be configured in ways other than those described here.)

General

Tek-STATUS™ components can be returned to system defaults any time during system programming by pressing these keystrokes at each RS816 Master Station:

FUNCTION, 81, ENTER, FUNCTION, 99, ENTER

To return multiple RS816 Master Stations to the default configuration, perform the keystrokes one at a time on each RS816. Verify that the two-beep verification tone has sounded before proceeding to the next RS816. These keystrokes assign address #1 to each RS816, and sets associated remote dome stations to On/Off mode.

Before proceeding with the various programming configurations, review the basic Tek-STATUS™ communication paths. Tek-STATUS™ uses two paths of communication:

Data Buss

The data buss is the communication link between the master station and the installed dome lamp assemblies for that master station. In order for the appropriate master station to communicate with the correct dome lamp assembly, each dome lamp assembly must have a unique address. (Refer to sections *Wiring Checkout & System Component Installation: LI804 Remote Dome Station Programming* and *System Operation: Using the RS840 Master Expander.*)

DSN Buss

The DSN buss is the communication link between all the installed master stations. In order for the master stations to communicate with each other on the DSN buss, each master station must have a unique address. (Refer to sections *System Operation: Using Multiple Master Stations.*)

Using Multiple Master Stations

Tek-STATUS™ can support up to 9 masters plus a lobby master. For example, a large medical facility with multiple doctors and a central point of patient entry might install a master station in the central lobby, plus a master station and associated remote dome stations at each doctor's nurses station. When a patient arrives to see a specific doctor, the receptionist can notify the appropriate nurses station that a patient has arrived.

To accomplish these intermaster communications, assign a unique address to each master station. The control codes range from 80 through 89, representing lobby station address #0, plus master station addresses #1 through #9. In the above example, set the lobby master station to address #0 using these keystrokes at the lobby master station:

FUNCTION, 80, ENTER

Master station #0 (control code 80) cannot have remote dome stations associated with it. Assign control codes sequentially to each of the remaining master stations using these keystrokes at each master station:

FUNCTION, (control code 81–89), ENTER

To place a call from the lobby to master #1, press these keys on the lobby master station:

TALK, 1

These keystrokes cause an audible beep at master #1. To acknowledge the audible beep, press CANCEL at master #1, silencing the beep tone.

Enhanced System Configuration Example #1:

System components:

- One (1) RS816 Master Station installed in the lobby
- One (1) RS816 Master Station at the nurses station
- Sixteen (16) LI804 Remote Dome Stations
- Sixteen (16) SF804 4-Button Peripheral Stations

Preliminary system checks:

- Refer to section *System Component Installation: LI804 Remote Dome Station Programming.*
- Verify that the correct address programming has been performed on the LI804.

Programming:

- Enter these keystrokes at the lobby RS816: FUNCTION, 80, ENTER.
- Enter these keystrokes at the nurses station RS816: FUNCTION, 81, ENTER, FUNCTION, 99, ENTER. After approximately 20 seconds, the RS816 will emit two beeps, indicating that it has searched the data buss for all attached LI804 Remote Dome Stations. Do not make any key entries to the system until the two beeps are heard.
- Enter these keystrokes at the lobby RS816: FUNCTION, 99, ENTER. After approximately 20 seconds, the RS816 will emit two beeps, indicating that it has searched the DSN buss for all attached RS816 Master Stations and RS850 Remote Indication & Control Panels. Do not make any key entries to the system until the two beeps are heard.
- The system should now be fully operational.

To place a call from the lobby to the nurses master station, press these keys on the lobby master station:

TALK, 1

These keystrokes cause an audible beep at the nurses master station. To acknowledge the audible beep, press CANCEL at the nurses master station, silencing the beep tone.

Enhanced System Configuration Example #2:

System components:

- One (1) RS816 Master Station installed in the lobby
- Two (2) RS816 Master Stations located at two separate nurses stations
- Thirty-two (32) total LI804 Remote Dome Stations. (Sixteen connected to each of the nurses station RS816 Master Stations.)
- Thirty-two (32) total SF804 4-Button Peripheral Stations

Preliminary system checks:

- Refer to section *System Component Installation: LI804 Remote Dome Station Programming.*
- Verify that the correct address programming has been performed on each set of LI804 Remote Dome Stations.

Programming:

- Enter these keystrokes at the lobby RS816: **FUNCTION, 80, ENTER.**
- Enter these keystrokes at the first nurses station RS816: **FUNCTION, 81, ENTER.**
- Enter these keystrokes at the second nurses station RS816: **FUNCTION, 82, ENTER.**

Note: The above steps set the addresses of the installed master stations to 0, 1 and 2.

- Enter these keystrokes at the lobby RS816: **FUNCTION, 99, ENTER.** After approximately 20 seconds, the RS816 will emit two beeps, indicating that it has searched the DSN buss for all attached RS816 Master Stations and RS850 Remote Indication & Control Panels. Do not make any key entries to the system until the two beeps are heard.
- Enter these keystrokes at the first nurses station RS816: **FUNCTION, 99, ENTER.** After approximately 20 seconds, the RS816 will emit two beeps, indicating that it has searched the data buss for all attached LI804 Remote Dome Stations. Do not make any key entries to the system until the two beeps are heard.
- Enter these keystrokes at the second nurses station RS816: **FUNCTION, 99, ENTER.** After approximately 20 seconds, the RS816 will emit two beeps, indicating that it has searched the data buss for all attached LI804 Remote Dome Stations. Do not make any key entries to the system until the two beeps are heard.
- The system should now be fully operational.

Note: Because Tek-STATUS™ is an extremely flexible system, all possible configurations cannot be individually addressed. Therefore these guidelines are provided to aid in the programming process:

- Each RS816 Master Station must have a unique address (**FUNCTION 80–89**).
- Each LI804 Remote Dome Station must have a unique address relative to its associated RS816.
- Master to master communication is accomplished via the DSN buss. If changes are made to the DSN buss configuration, initialize each installed RS816 Master Station (**FUNCTION, 99, ENTER**) so that it learns the new DSN buss configuration.
- The communication between any given master station and its attached LI804 Remote Dome Stations is accomplished via the data buss. If any changes are made to the addresses or the quantity of attached LI804 Remote Dome Stations, initialize the associated RS816 Master Station (**FUNCTION, 99, ENTER**) so that it learns the new data buss configuration.
- All active indications must be cleared or reset before attempting any programming changes.

Passing Visual Information

Tek-STATUS™ installations consisting of multiple RS816 Master Stations can echo indications from one master station to another master station. Any master station can be temporarily taken "offline" and its status displays reassigned to another master station (if the second master station has sufficient capacity for the status displays of both masters). A master station cannot receive data from more than one master at a time, and cannot display the status of more than 40 LI804 Remote Dome Stations. (See the section *System Installation: Wiring Installation: General System Options*.)

The following commands are used to pass visual information from one RS816 Master Station to another. (Before proceeding, turn off all dome lights.) Enter these commands at the RS816 that is forwarding its data:

FUNCTION, 1, (address of RS816 that data is being passed to), **ENTER**

To transfer status displays from master #1 to master #2, press these keys on master #1:

FUNCTION, 1, 2, ENTER

To return the masters to defaults (no data passed to any other master), turn off all dome lights, and then press these keys on the RS816 Master Station that was forwarding its data:

FUNCTION, 1, 0, ENTER

RS850 Remote Indication & Control Panel Installation

General

The RS850 Remote Indication & Control Panel is designed to be used as an indicator for services requested. A maximum of six RS850 Remote Indication & Control Panels can be installed per Tek-STATUS™ system.

For example, the RS850 might be mounted in an X-ray laboratory so that a doctor or nurse in an examination room could summon the X-ray technician. To initiate the summons, the nurse/doctor presses a specific button on the SF804 4-Button Peripheral Station.

At the RS850 Remote Indication & Control Panel, an LED indicator will illuminate to indicate which examination room placed the call, and a double beep will sound approximately every three seconds. The summons is acknowledged by pressing the appropriate button on the RS850. This silences the beep tone and changes the state of both the indicator light and the associated remote dome light to the next indication—in this example, from flashing to steady.

After accomplishing the assigned task, the X-ray technician presses the appropriate button on the SF804 Remote Dome Station. This turns off both the associated indicator light on the RS850 and the corresponding light on the LI804 Remote Dome Station.

RS850 Addressing

Because up to six RS850 Remote Indication & Control Panels can be installed on a system, each RS850 must be assigned a unique address (addresses 2–7). This table provides the dipswitch settings for these RS850 panel addresses:

Address	Switch 1	Switch 2	Switch 3	Switch 4
2	Off	Off	Off	Off
3	On	Off	Off	Off
4	Off	On	Off	Off
5	On	On	Off	Off
6	Off	Off	On	Off
7	On	Off	On	Off
Reset	X	X	X	On

LI804 Remote Dome Station Indication

When using an RS850 Remote Indication & Control Panel, one of the buttons on each SF804 Remote Dome Station is assigned to place calls to the RS850. The type of indication provided by that button is programmed from these available indication codes:

Indication Code	Description
1	Sets selected lamp to On/Off.
2	Sets selected lamp to Flash/Off.
5	Sets selected lamp to On/Flash/Off.
6	Sets selected lamp to Flash/On/Off.
8	Sets selected lamp to Flash/Fast Flash/Off
9	Sets selected lamp to On/Flash/Fast Flash/Off

Indication codes are programmed from the associated RS816 Master Station using the following keystrokes: (Note: **COLUMN, X, ROW, X,** designates the lamp's position on the master station keypad.)

COLUMN, 3, ROW, 1, FUNCTION, 4 (the RS850's address)**, 2** (an indication code)**, ENTER**

If entered on the keypad of master station #1, this entry causes the amber lamp of its LI804 Remote Dome Station #3 to operate in Flash/Off mode at RS850 Remote Panel #4. All remaining remote dome stations attached to the system will continue to operate in the globally programmed mode previously selected.

Note: The RS850 Remote Indication & Control Panel produces both audible and visual signals only when one of the Slow Flash modes is used. All other modes produce only visual indications.

Figure 11—Tek-STATUS™ System Block Wiring Diagram

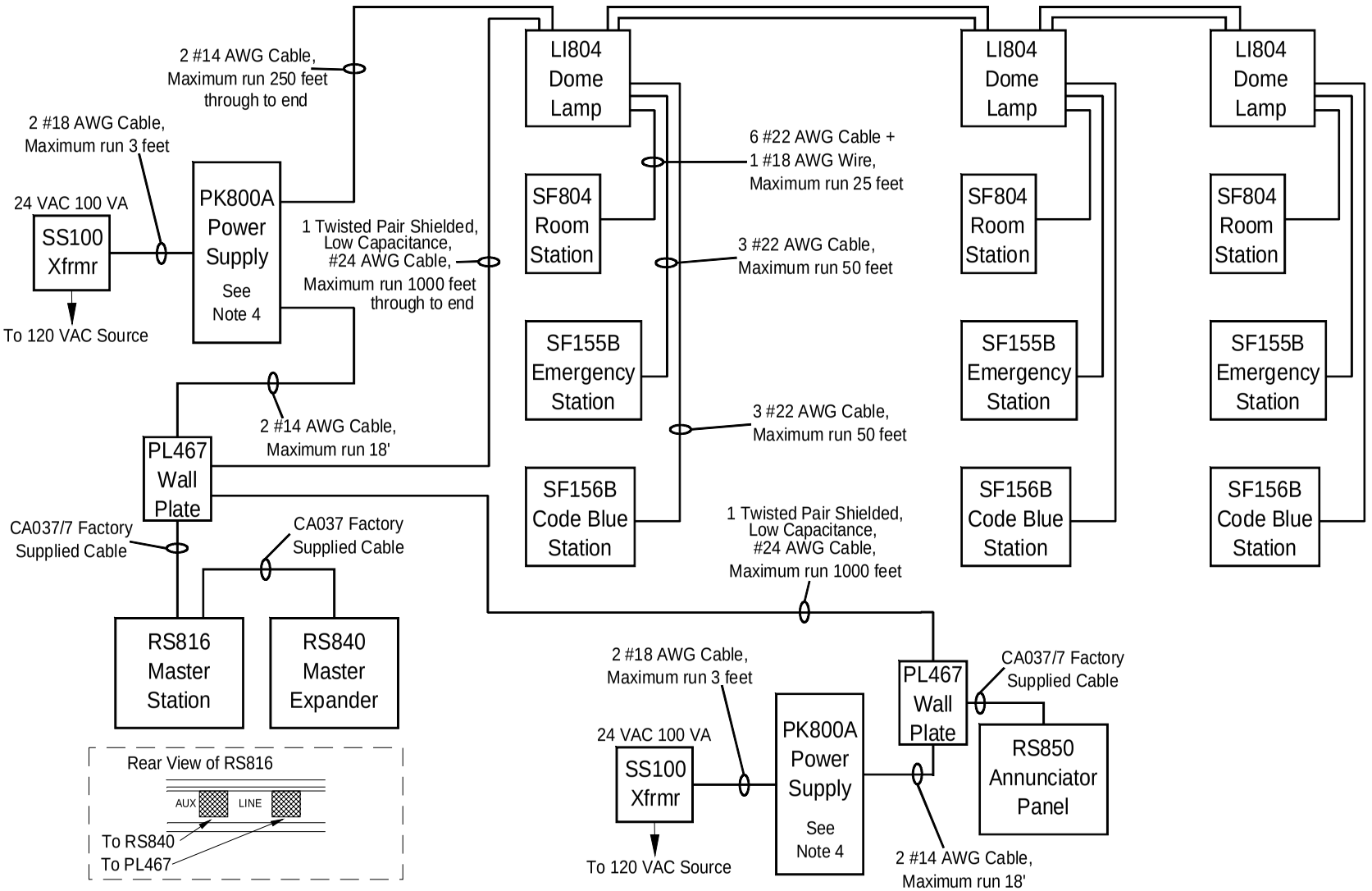

Drawing Number & Name: IL667 RS800 Block Rev2 112002 1

Notes:

1. 1 PK800A can support 1 RS816, 1 RS840, 8 LI804, 8 SF804, 8 SF155B and 8 SF156B. Equipment above this limit requires additional PK800A Power Supplies.
2. DO NOT "T" tap LI804 common cables.
3. 8 LI804 maximum on a common run.
4. When using multiple PK800A units connect all grounds together (common).
5. All wiring is stranded.
6. Read entire manual to ensure all wiring requirements are met!

Figure 12—Tek-STATUS™ Multiple Master Block Wiring Diagram

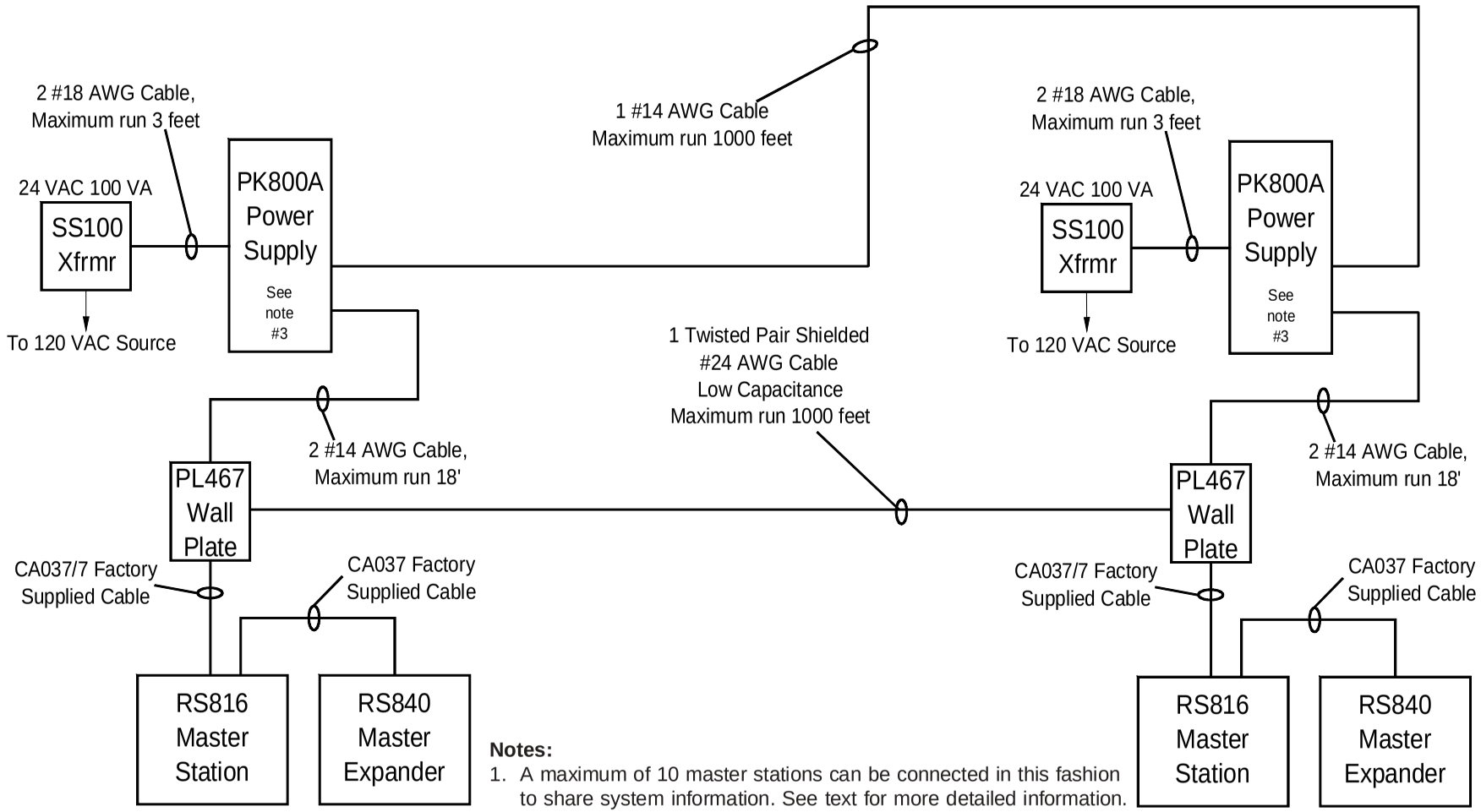

Notes:

1. A maximum of 10 master stations can be connected in this fashion to share system information. See text for more detailed information.
2. DO NOT “T” tap data buss cables.
3. When using multiple PK800A units connect all grounds together (common)
4. All wiring is stranded.
5. Read entire manual to ensure all wiring requirements are met!

Drawing Number & Name: IL667 RS800 Block2 Rev1 091902 1

Figure 13—PL467 Wall Plate Wiring Diagram

Notes:
1. ALL Power/Ground connections: #14 AWG
2. ALL Data connections: #24 Twisted/ Shielded pair, low cap.
3. When using multiple PK800A units connect all grounds together (common)
4. All wiring is stranded.
5. Read entire manual to ensure all wiring requirements are met!

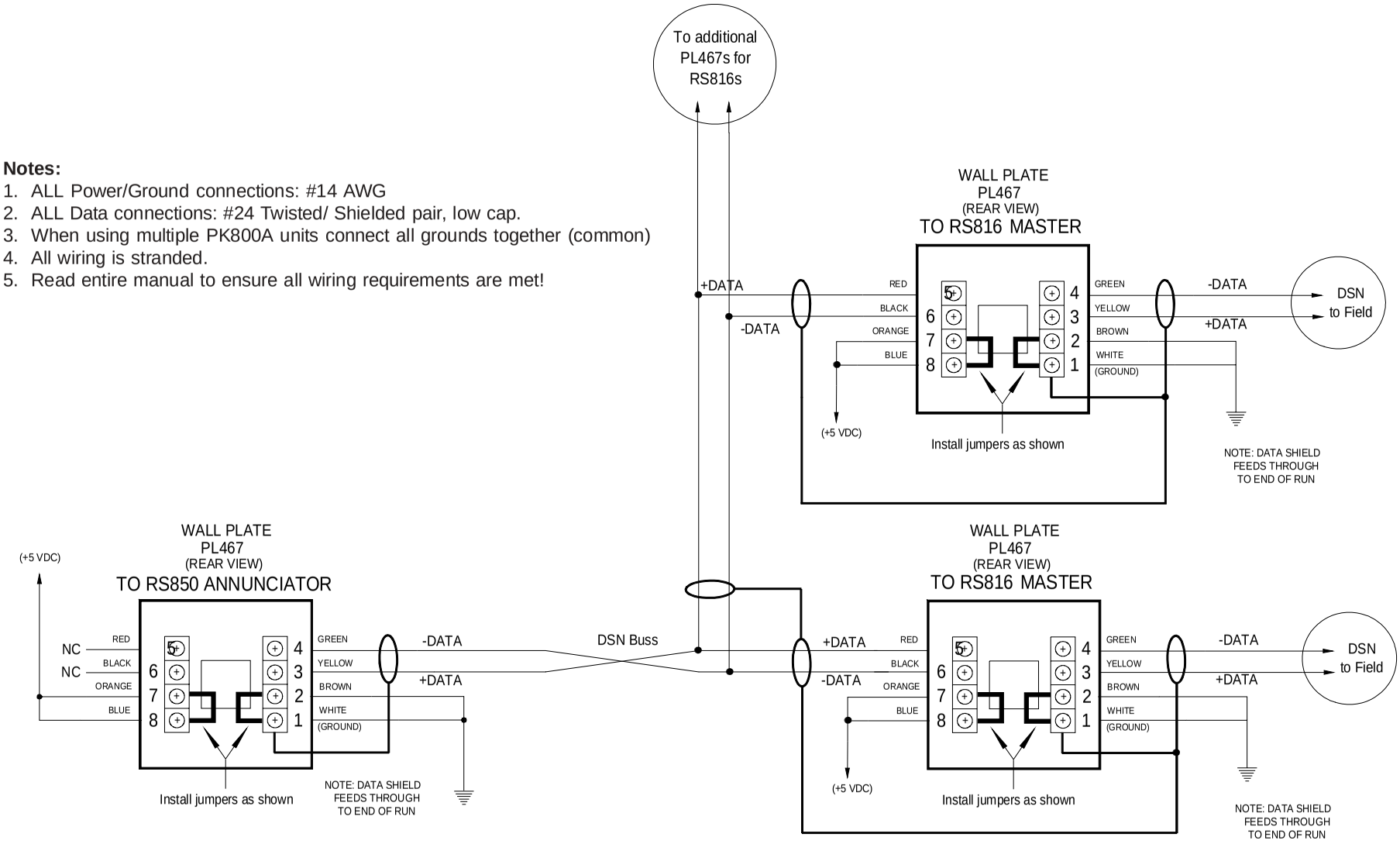

IL667 PL467 Wiring Rev1 102202 1

Figure 14—Tek-STATUS™ Group Configuration

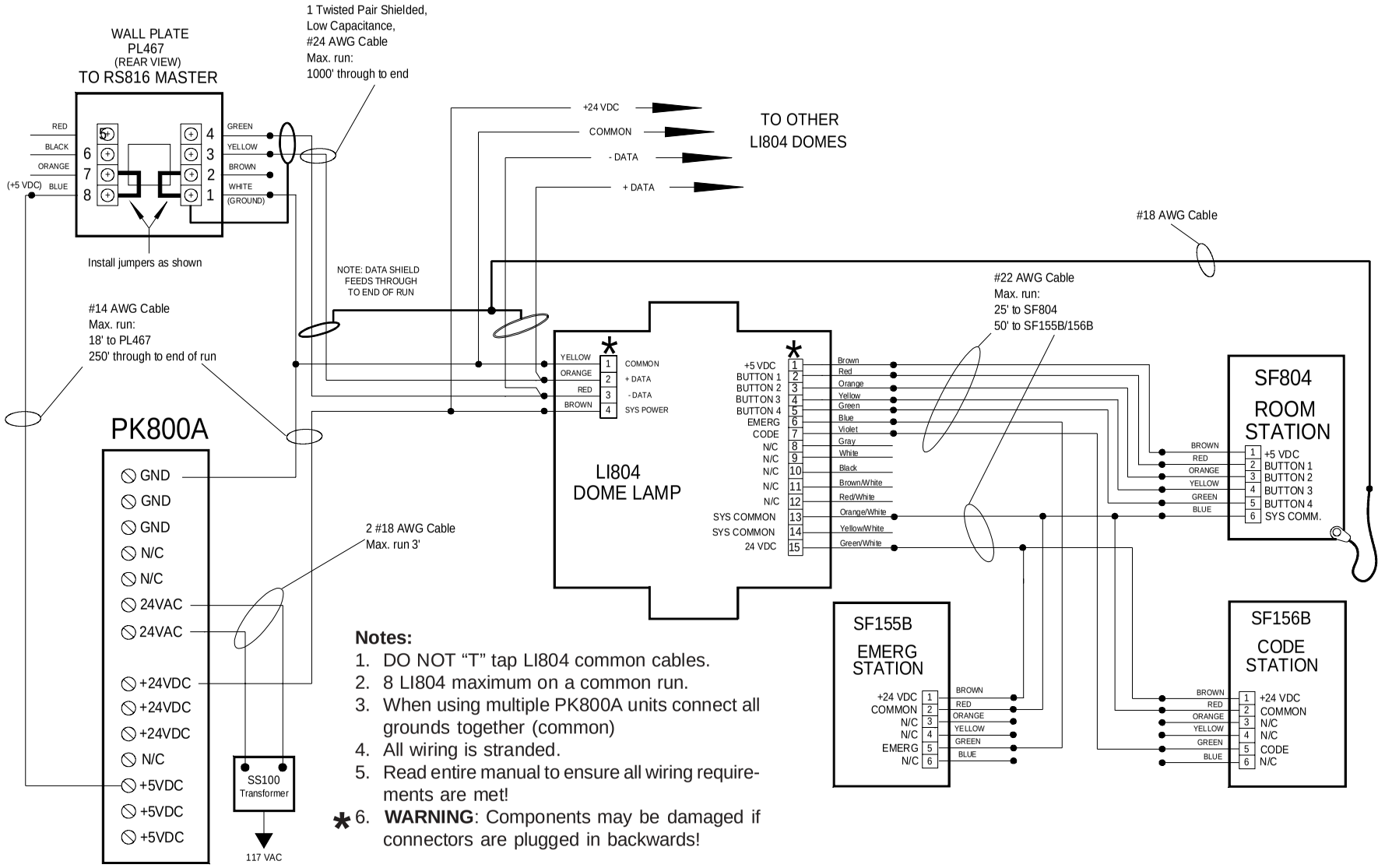

Notes:

1. DO NOT "T" tap LI804 common cables.
2. 8 LI804 maximum on a common run.
3. When using multiple PK800A units connect all grounds together (common)
4. All wiring is stranded.
5. Read entire manual to ensure all wiring requirements are met!

* 6. **WARNING**: Components may be damaged if connectors are plugged in backwards!

Drawing Name & Number: IL667 RS800 Wiring Rev0 100901 1

Figure 15—LI804 Remote Dome Station Programming

FIGURE 1

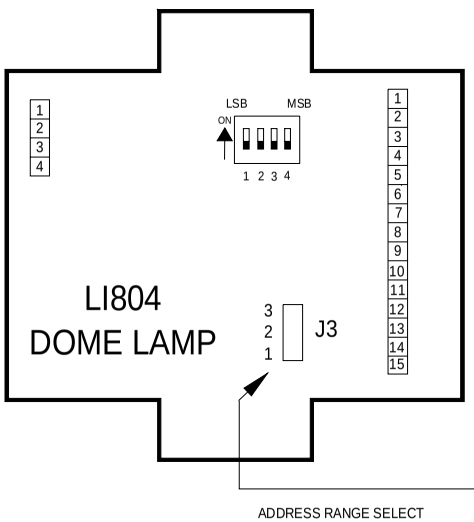

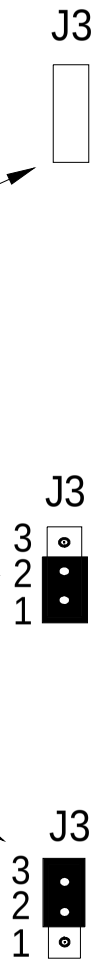

ADDRESS TABLE				
SW1	SW2	SW3	SW4	ROOM NUMBER
OFF	OFF	OFF	OFF	1
ON	OFF	OFF	OFF	2
OFF	ON	OFF	OFF	3
ON	ON	OFF	OFF	4
OFF	OFF	ON	OFF	5
ON	OFF	ON	OFF	6
OFF	ON	ON	OFF	7
ON	ON	ON	OFF	8
OFF	OFF	OFF	ON	9
ON	OFF	OFF	ON	10
OFF	ON	OFF	ON	11
ON	ON	OFF	ON	12
OFF	OFF	ON	ON	13
ON	OFF	ON	ON	14
OFF	ON	ON	ON	15
ON	ON	ON	ON	16

ADDRESS TABLE					
J3	SW1	SW2	SW3	SW4	ROOM NUMBER
1-2	OFF	OFF	OFF	OFF	17
1-2	ON	OFF	OFF	OFF	18
1-2	OFF	ON	OFF	OFF	19
1-2	ON	ON	OFF	OFF	20
1-2	OFF	OFF	ON	OFF	21
1-2	ON	OFF	ON	OFF	22
1-2	OFF	ON	ON	OFF	23
1-2	ON	ON	ON	OFF	24
1-2	OFF	OFF	OFF	ON	25
1-2	ON	OFF	OFF	ON	26
1-2	OFF	ON	OFF	ON	27
1-2	ON	ON	OFF	ON	28
1-2	OFF	OFF	ON	ON	29
1-2	ON	OFF	ON	ON	30
1-2	OFF	ON	ON	ON	31
1-2	ON	ON	ON	ON	32

ADDRESS TABLE					
J3	SW1	SW2	SW3	SW4	ROOM NUMBER
2-3	OFF	OFF	OFF	OFF	33
2-3	ON	OFF	OFF	OFF	34
2-3	OFF	ON	OFF	OFF	35
2-3	ON	ON	OFF	OFF	36
2-3	OFF	OFF	ON	OFF	37
2-3	ON	OFF	ON	OFF	38
2-3	OFF	ON	ON	OFF	39
2-3	ON	ON	ON	OFF	40

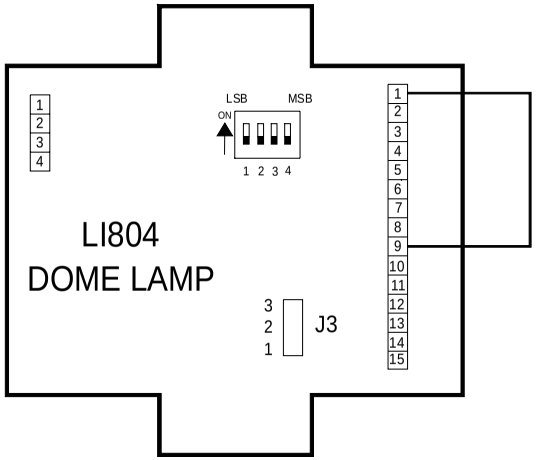

FIGURE 2

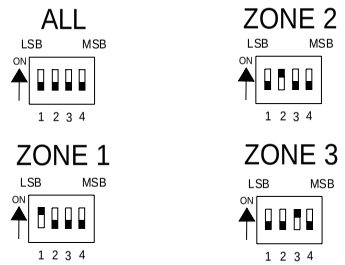

LI804 Used As Zone Dome

Notes:

1. Install jumper as shown in Figure 2.
2. Turn dipswitch ON to activate zone.
3. Switch changes applied on power-up.
4. Zone stations do not have an address.
5. Zone dome counts during power supply calculations. (max # per run, per power supply)
6. Annunciation priority: (decreasing) fast flash, flash, steady.
7. Zoning: 0-15 Zone #1
   16-31 Zone #2
   32-40 Zone #3

Drawing Name & Number: IL667 LI804 Addressing Rev1 091702 1