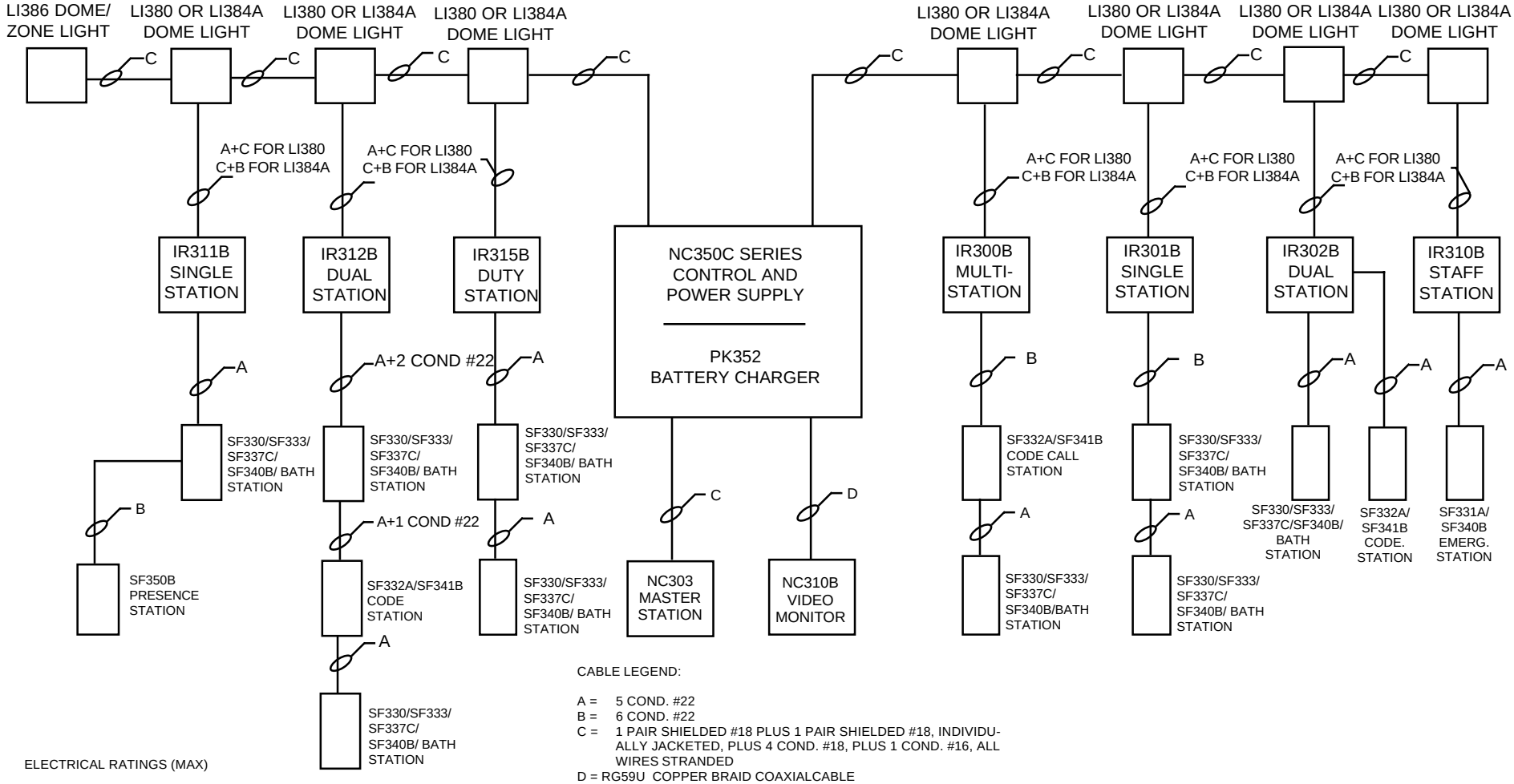

CABLE LEGEND:

A = 5 COND. #22
B = 6 COND. #22
C = 1 PAIR SHIELDED #18 PLUS 1 PAIR SHIELDED #18, INDIVIDU-ALLY JACKETED, PLUS 4 COND. #18, PLUS 1 COND. #16, ALL WIRES STRANDED
D = RG59U COPPER BRAID COAXIALCABLE

OR

WM300 CABLE: Nine conductor cable assembly protected by a Gray PVC .045" thick jacket. Nominal O.D. - .590". Configured as follows.

* Data Assembly consists of 1 twisted pair plus 1 conductor #18 gauge stranded wire wrapped by an overall aluminum/mylar shield and an Orange PVC .020" thick jacket. The shield has a #18 gauge drain wire. The conductors are Yellow, Orange and Green insulated by .033" thick Tapolene. The capacitance between these conductors is 12.5 pF/foot.
* Audio Assembly consists of 1 twisted pair #18 gauge stranded wire wrapped by an overall aluminum/mylar shield and a Gray PVC .020" thick jacket. The shield has a #18 gauge drain wire. The conductors are Purple and Gray insulated by .015" thick PVC.
* Three #18 gauge stranded wires wrapped by an overall aluminum/mylar shield. The shield has a #18 gauge drain wire. The conductors are Red, Brown and Blue insulated by .015" thick PVC.
* One #16 gauge stranded wire. The conductor is Black insulated by .016" thick PVC.

ELECTRICAL RATINGS (MAX)

NC350C SERIES CPE: 120 VAC, 4 AMPS

NC310B MONITOR: 120 VAC, .5 AMPS

NC303 MASTER: 12 VDC, 300 mA

IR300B, IR301B, IR302B, IR310B, IR311B, IR312B, IR315B PATIENT, DUTY, STAFF STATIONS: 24 VDC, 250 mA

SF330, SF331, SF332A, SF333, SF337C, SF340B, SF341B, SF350B BATH, CODE, EMERGENCY, PRESENCE STATIONS: 12 VDC, 30 mA

LI380/L384A DOME LIGHTS: 24 VDC, 200 mA

LI386 DOME/ZONE LIGHT: 24 VDC, 250 mA

SF301PIR PILLOW SPEAKER: 12 VDC, 50 mA

PK352 BATTERY CHARGER: 24 VAC, 1.25 AMP

NOTES:

1. DO NOT EXCEED 16 DOME LIGHTS PER RUN.
2. DO NOT EXCEED 16 STATIONS PER RUN WHEN USED WITH 4 LAMP DOME LIGHTS. UP TO 32 STATIONS MAY BE USED PER CABLE RUN IF SINGLE OR DOUBLE DOME LIGHTS ARE USED.
3. EACH MASTER MUST BE HOME RUN TO NC350C CENTRAL PROCESSING EQUIPMENT (CPE).
4. FOR RUNS OF 500 TO 1000 FT., USE #18 GAUGE WIRE.
5. FOR RUNS OF 1000 TO 1500 FT., USE #16 GAUGE WIRE. RUN SHOULD NOT EXCEED 1500 FT.
6. DO NOT RUN CONDUIT OR WIRE TO BOTTOM KNOCKOUTS ON IR SERIES STATION BOX. NO ACCESS IS AVAILABLE.

TekTone ®	TITLE: BLOCK WIRING DIAGRAM APP: NC300 NURSE CALL SYSTEM	MATL: DE REV: 10	DATE: 03/18/99 PAGE: NL402