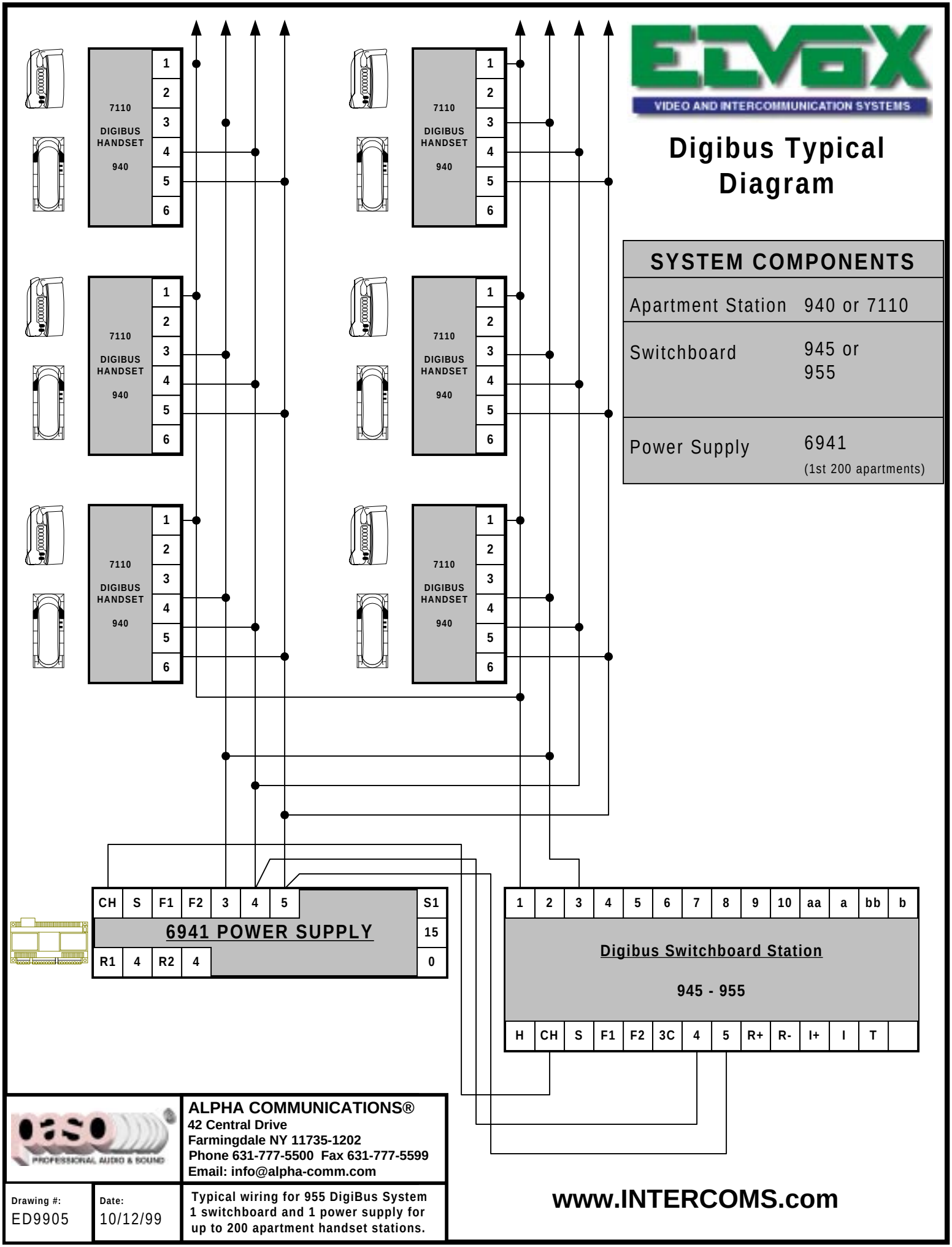
ELVOX
VIDEO AND INTERCOMMUNICATION SYSTEMS
Digibus Typical Diagram
SYSTEM COMPONENTS
Apartment Station 940 or 7110
Switchboard 945 or 955
Power Supply 6941 (1st 200 apartments)
7110 DIGIBUS HANDSET 940
1 2 3 4 5 6
CH S F1 F2 3 4 5 S1
6941 POWER SUPPLY
15
R1 4 R2 4 0
1 2 3 4 5 6 7 8 9 10 aa a bb b
Digibus Switchboard Station
945 - 955
H CH S F1 F2 3C 4 5 R+ R- I+ I T
ALPHA COMMUNICATIONS®
42 Central Drive
Farmingdale NY 11735-1202
Phone 631-777-5500 Fax 631-777-5599
Email: info@alpha-comm.com
PROFESSIONAL AUDIO & SOUND
Drawing #: ED9905
Date: 10/12/99
Typical wiring for 955 DigiBus System 1 switchboard and 1 power supply for up to 200 apartment handset stations.
www.INTERCOMS.com